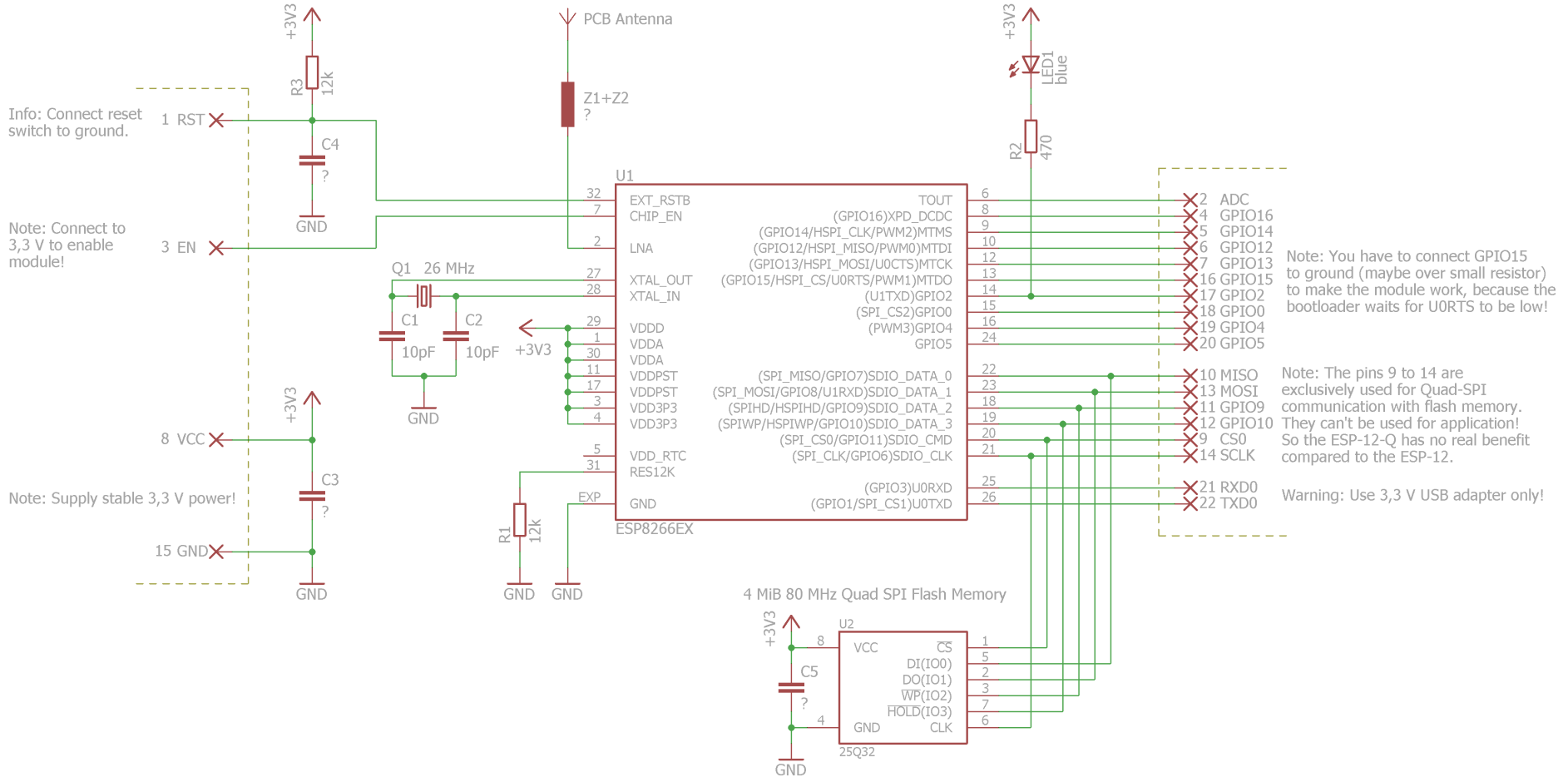

Reverse engineered schematic of AI-THINKER ESP-12-E Series ESP-12-Q WiFi module.
bimbo385@freenet.de

TITLE: ESP-12E	
Document Number: ---	REV: 2
Date: 01.11.2015 14:08	Sheet: 1/1